FILE: N:\Group Folders\Engineering\AutoCAD\AutoCAD DWGS\SOM\PVC\Web\25RCBweb.dwg

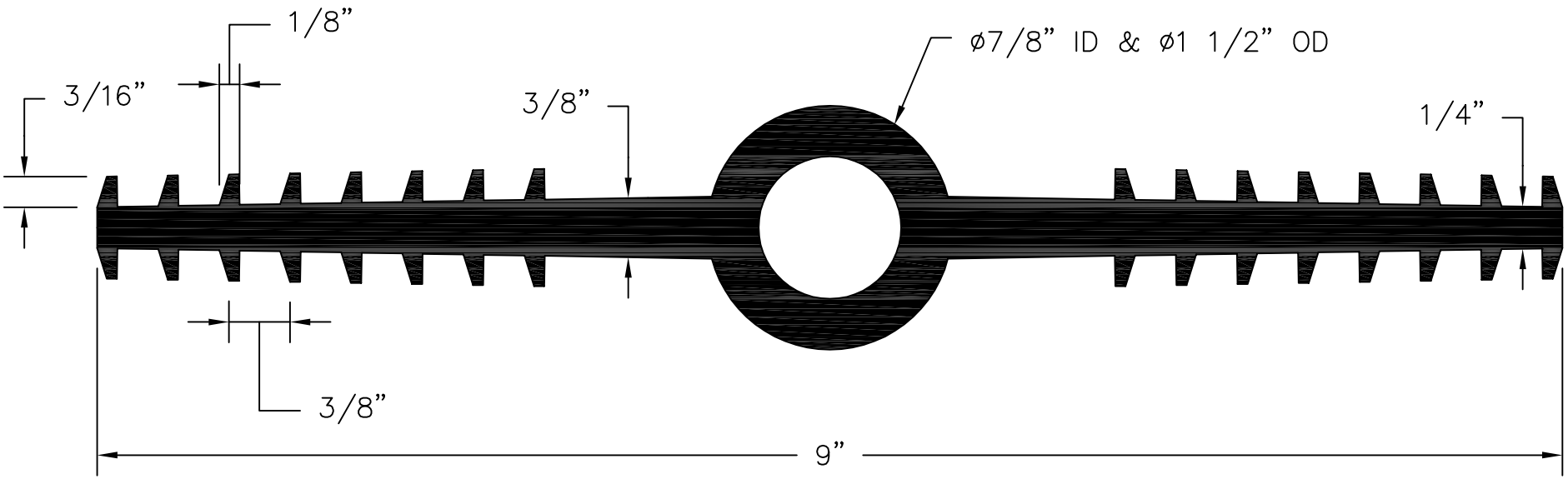


25RCB PROFILE

SCALE: NTS

BUREAU OF RECLAMATION

| REV. MARK | REVISION | BY | CHK | APP | DATE |
|---|---|---|---|---|---|
| | | | | | |
| | | | | | |
| | | | | | |
| | | | | | |
| | | | | | |

| | |
|---|---|
| DESIGNED: | |
| DRAWN: | |
| CHECKED: | |
| APPROVED: | |
| FAB. REP.: | |
| SHEET NUMBER: | |

| | |
|---|---|
| DATE: | |
| PART NUMBER: | 25RCB |
| QUANTITY REQUIRED: | |
| SCALE: | AS SHOWN |
| DWG. REF. NO.: | 25RCB |


SOUTHERN METAL & PLASTIC PRODUCTS

3400 TREE CRT. IND. BLVD., ST. LOUIS, MO 63122-6689

PH: 800-325-3597 FX: 636-825-6567

WEBSITE: www.sometals.com


TITLE: 25RCB – 9" X 3/8" RIBBED WITH CENTERBULB

REV